TEST REPORT

REPORT NUMBER: 101536549COQ-001
ORIGINAL ISSUE DATE: April 1, 2014

EVALUATION CENTER

INTERTEK TESTING SERVICES NA LTD.
1500 BRIGANTINE DRIVE
COQUITLAM, BC V3K 7C1

RENDERED TO

FORTRESS RAILING PRODUCTS
1800 JAY ELL DRIVE SUITE 200
RICHERSON, TX 75081

PRODUCT EVALUATED: P2 and Evolve External Brackets

EVALUATION PROPERTY: Load Requirements

Report of P2 and Evolve External Brackets for compliance with the applicable requirements of the following criteria:

- **2010 *National Building Code of Canada***
  - **Section 9.8.8.2, 9.8.8.3, 9.8.8.5, and 9.8.8.6**
- **2012 *Ontario Building Code***
  - **Section 9.8.8.2, 9.8.8.3, 9.8.8.5, and 9.8.8.6**
- **2006 *Alberta Building Code***
  - **Section 9.8.8.2, 9.8.8.3, 9.8.8.5, and 9.8.8.6**

1 Table of Contents

2 Introduction

Intertek Testing Services NA Ltd. (Intertek) has conducted a test program on two railing brackets submitted by Fortress Railing Products. The evaluation was carried out to determine whether their AL[13] Aluminum Railing when installed with different bracket configurations would resist the required loads for dwelling units and exterior guards serving not more than 2 dwelling units, as specified in the following Building Codes:

- 2010 *National Building Code of Canada* (NBC)
  - Section 9.8.8.2, *Loads On Guards*
  - Section 9.8.8.3, *Height of Guards*
  - Section 9.8.8.5, *Openings in Guards*
  - Section 9.8.8.6, *Design of Guards to Not Facilitate Climbing*
- 2012 Ontario Building Code (OBC)
  - Section 9.8.8.2, *Loads On Guards*
  - Section 9.8.8.3, *Height of Guards*
  - Section 9.8.8.5, *Openings in Guards*
  - Section 9.8.8.6, *Guards Designed Not to Facilitate Climbing*
- 2006 Alberta Building Code (ABC)
  - Section 9.8.8.2, *Loads On Guards*
  - Section 9.8.8.3, *Height of Guards*
  - Section 9.8.8.5, *Openings in Guards*
  - Section 9.8.8.6, *Design to Prevent Climbing*

This evaluation was conducted in the month of March 2014.

3 Test Samples

3.1. SAMPLE SELECTION

The client submitted various railing components to assemble two (2) 8 ft. guard rail systems to the Evaluation Center on February 18, 2014 (Coquitlam ID# VAN1402181510-001). Components submitted were brackets, posts, and welded pickets with top and bottom rails.

3.2. SAMPLE AND ASSEMBLY DESCRIPTION

The assembled railing systems were identified as the following:

Table 1. Railing Details

Railing	Posts	Mounting Plate	Picket and Rails	Brackets
8 ft. Al[13] Railing System	1: 3” x 3” aluminum 2: 4” x 4” treated Western Red Cedar	5-1/2" x 5-1/2” x 3/8” thick aluminum	3/4” x 3/4” aluminum pickets welded to 1-5/8” x 1-1/8” top and bottom rails	P2
8 ft. Al[13] Railing System	1: 3” x 3” aluminum 2: 4” x 4” treated Western Red Cedar	5-1/2" x 5-1/2” x 3/8” thick aluminum	3/4” x 3/4” aluminum pickets welded to 1-5/8” x 1-1/8” top and bottom rails	Evolve External

An Intertek representative assembled the railing per the manufacturer’s installation instructions using the configuration details outlined for a 40 in. Railing Panel Height (refer to Appendix B for installation instructions). Per the client’s request, the railing was assembled using a 4 in. x 4 in. treated Western Red Cedar post on one end, which was restrained during testing to evaluate the

connection. The post to sub-structure fastener evaluation was not evaluated in this report; the aluminum post was mounted to a test frame using four 3/8 in. Grade 5 bolts.

Refer to Figures 1 and 2 below for the P2 and Evolve External Brackets.

Figure 1. P2 Bracket

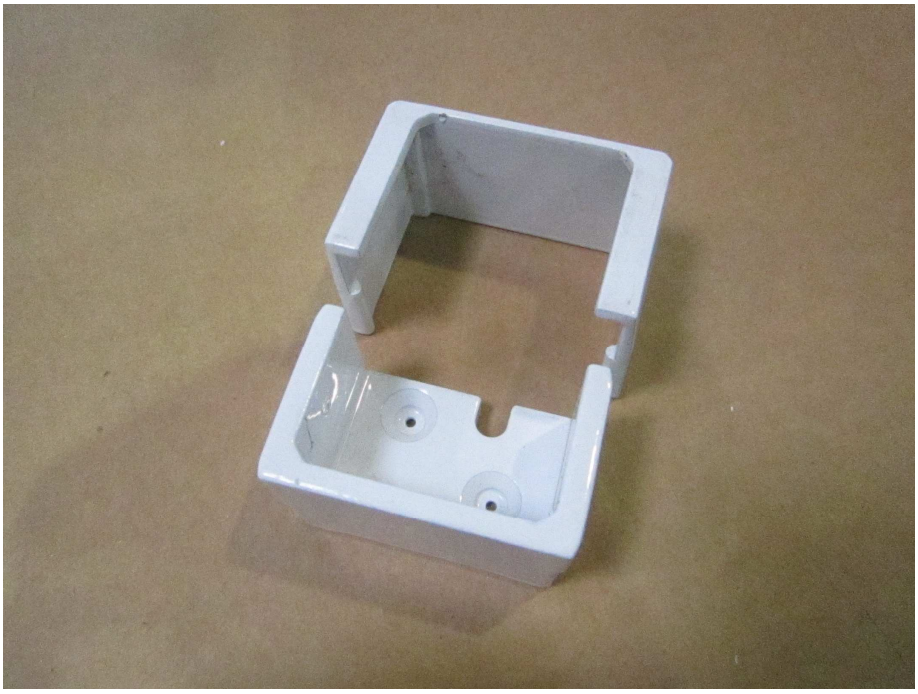

Figure 2. Evolve External Bracket

4 Testing and Evaluation Methods

The test specimens were loaded at a rate to achieve the specified loads between 10 seconds and 5 minutes. The specified test loads were held for one minute before the load was released. As per Section 9.8.8.2 of the 2010 NBC, 2012 OBC, and 2006 ABC, the following tests were conducted for use within dwelling units and exterior guards serving not more than 2 dwelling units:

4.1 2010 NBC / 2012 OBC / 2006 ABC: SECTION 9.8.8.2. *LOADS ON GUARDS*

1) The minimum specified horizontal load applied inward or outward at the top of every required guard shall be 0.5 kN/m or a concentrated load of 1.0 kN applied at any point

2) Individual elements within the *guard*, including solid panels and pickets, shall be designed for a concentrated load of 0.5 kN applied over an area of 300 mm x 300 mm located at any point in the element or elements so as to engage 3 balusters.

3) The minimum specified load applied vertically at the top of every required *guard* shall be 1.5 kN/m.

4) None of the loads specified above need be considered to act simultaneously.

Notes:

1. A minimum safety factor of 1.67 is applicable to the above loads.

4.2 2010 NBC / 2012 OBC / 2006 ABC: SECTION 9.8.8.3 *HEIGHT OF GUARDS*

1) All guards shall be not less than 1070 mm high.

4.3 2010 NBC / 2012 OBC / 2006 ABC: SECTION 9.8.8.5 *OPENINGS IN GUARDS*

1) Openings through any guard shall be of a size that will prevent the passage of a spherical object having a diameter of 100 mm unless it can be shown that the location and size of openings that exceed this limit do not present a hazard.

4.4 2010 NBC / 2012 OBC / 2006 ABC: SECTION 9.8.8.6 *DESIGN OF GUARDS TO NOT FACILITATE CLIMBING / DESIGN TO PREVENT CLIMBING*

1) Guards except those in industrial occupancies and where it can be shown that the location and size of openings do not present a hazard, shall be designed so that no member, attachment or opening facilitates climbing.

2) Guards shall be deemed to comply with Sentence (1) where all elements protruding from the vertical and located within the area between 140 mm and 900 mm above the floor or walking surface protected by the guard conform to one of the following clauses:
a) they are located more than 450mm horizontally and 20 mm vertically, or
b) they provide not more than 15 mm horizontal offset,
c) they do not provide a toe-space more than 45mm horizontally and 20 mm vertically, or
d) they present more than a 2-in-1 slope on the offset.

4.5 IN-FILL LOAD TEST

A load of 1.25 kN (281 lbf) was applied using a 300 mm x 300 mm square block on the center of the railing system normal to the in-fill so as to engage 3 glass balusters. After release of the load, the system was evaluated for failure, any evidence of disengagements of any component and visible cracks in any component.

4.6 UNIFORM LOAD TEST

The top rail of the guardrail system was subjected to two separate tests where a maximum equivalent uniform load of 1.25 kN/m (86 plf) was applied horizontally and 3.75 kN/m (257 plf) was applied vertically. The loads were applied using quarter point loads. After release of the load, the system was evaluated for failure, any evidence of disengagements of any component and visible cracks in any component.

4.7 CONCENTRATED LOAD TEST

The top rail of the guardrail system was subjected to three separate tests where a concentrated load was applied at the following locations:

- 1.67 kN (375 lbs) horizontally at the centre of the guardrail.
- 1.88 kN (421 lbs) horizontally at the top rail adjacent to the aluminum post connection to verify the connection capacity
- 2.5 kN (562 lbs) horizontally at the top rail adjacent to the wood post connection to verify the connection capacity

5 Testing and Evaluation Results

5.1. RESULTS AND OBSERVATIONS

The product test results are shown in Tables 1-2 below and a copy of the test data is located in Appendix A.

Table 1. P2 Bracket

Section	Property	Result	Requirement	Pass/Fail
9.8.8.2	In-fill Load	281 lbs	281 lbs	Pass
	Vertical Uniform Load	2060 lbs	2060 lbs	Pass
	Horizontal Uniform Load	687 lbs	687 lbs	Pass
	Mid-span Concentrated Load	375 lbs	375 lbs	Pass
	Adjacent to Aluminum Post Connection Concentrated Load	421 lbs	421 lbs	Pass
	Adjacent to Wood Post Connection Concentrated Load	562 lbs	562 lbs	Pass
9.8.8.3	Height of Guards	1105 mm	≥ 1070 mm	Pass
9.8.8.5	Openings in Guards	Between pickets: 95 mm Under bottom rail: 89 mm	< 100 mm	Pass
9.8.8.6	Design to Not Facilitate Climbing	No elements protruding from the vertical between 140 mm and 900 mm	No elements from the vertical between 140 mm and 900 mm that facilitate climbing	Pass

Table 1. Evolve External Bracket				
Section	**Property**	**Result**	**Requirement**	**Pass/Fail**
9.8.8.2	In-fill Load	281 lbs	281 lbs	Pass
	Vertical Uniform Load	2060 lbs	2060 lbs	Pass
	Horizontal Uniform Load	687 lbs	687 lbs	Pass
	Mid-span Concentrated Load	375 lbs	375 lbs	Pass
	Adjacent to Aluminum Post Connection Concentrated Load	421 lbs	421 lbs	Pass
	Adjacent to Wood Post Connection Concentrated Load	562 lbs	562 lbs	Pass
9.8.8.3	Height of Guards	1105 mm	≥ 1070 mm	Pass
9.8.8.5	Openings in Guards	Between pickets: 95 mm Under bottom rail: 89 mm	< 100 mm	Pass
9.8.8.6	Design to Not Facilitate Climbing	No elements protruding from the vertical between 140 mm and 900 mm	No elements from the vertical between 140 mm and 900 mm that facilitate climbing	Pass

6 Conclusion

The Fortress Railing Products P2 and Evolve External Brackets identified in this test report has complied with the load requirements for guards within dwelling units and in exterior guards serving not more than 2 dwelling units, as specified in the following Building Codes:

- 2010 *National Building Code of Canada* (NBC)
  - Section 9.8.8.2, *Loads On Guards*
  - Section 9.8.8.3, *Height of Guards*
  - Section 9.8.8.5, *Openings in Guards*
  - Section 9.8.8.6, *Design of Guards to Not Facilitate Climbing*
- 2012 Ontario Building Code (OBC)
  - Section 9.8.8.2, *Loads On Guards*
  - Section 9.8.8.3, *Height of Guards*
  - Section 9.8.8.5, *Openings in Guards*
  - Section 9.8.8.6, *Guards Designed Not to Facilitate Climbing*
- 2006 Alberta Building Code (ABC)
  - Section 9.8.8.2, *Loads On Guards*
  - Section 9.8.8.3, *Height of Guards*
  - Section 9.8.8.5, *Openings in Guards*
  - Section 9.8.8.6, *Design to Prevent Climbing*

The product test results are presented in Section 5 of this report.

INTERTEK TESTING SERVICES NA LTD.

Reported by: _____
Chris Chang, P.Eng.
Engineer, Building Products

04/03/2014

PROFESSIONAL ENGINEER
PROVINCE OF BRITISH COLUMBIA
D. G. LUNGU
28490

04/03/2014

PROFESSIONAL ENGINEER ALBERTA
DAN G. LUNGU

Reviewed by: _____
Dan Lungu, P. Eng.
Engineer, Manufactured Housing

LICENSED PROFESSIONAL ENGINEER
K. S. KOONER
100156550
PROVINCE OF ONTARIO

04/01/14

Reviewed by: _____
Kal Kooner, P. Eng.
Manager, Building Products

APPENDIX A: Test Data (5 pages)

Company	Fortress Railing Products	Technician(s)	Kevin Penner / Paul Randhawa
Project No.	G101536549	Reviewer	Riccardo DeSantis
Models	P2 Bracket, Evolve External Bracket	Start/End Date	March 5-7, 2014
Product Name	AL13 Railing System	Sample ID	VAN1402181510-001
Standard	**2010 NBC/2012 OBC/2006 ABC, Section 9.8.8.2, 9.8.8.3, 9.8.8.5, 9.8.8.6**		

Test Data Package

Table of Contents

Intertek

Test:	**Loads on Guards**	Project:	G101536549
Date:	5-Mar-14	Eng/Tech:	Paul Randhawa
Client:	Fortress Railing Products	Reviewer:	Riccardo DeSantis
Product:	**AL¹³ Railing System with P2 Bracket**		

Post Spacing:	8	ft	2.44	m
Height of Guard:	42	in	1067	mm
Opening in Guard:	3.875	in	98	mm

Method: 2010 National Building Code of Canada, 9.8.8.2 Loads on Guards
2012 Ontario Building Code, 9.8.8.2 Loads on Guards
2006 Alberta Building Code, 9.8.8.2 Loads on Guards

Safety Factor: 1.67 (based on a resistance factor Ø = 0.9 for aluminum)
1.875 (based on a resistance factor Ø = 0.8 for shear connection)
2.50 (based on a resistance factor Ø = 0.6 for aluminum to wood connection)

Equipment: Artech 5000 lbf Load Cell (Intertek ID# 9-0343, cal due October 2014)
Vaisala Temp/RH Indicator (Intertek ID# 9-0176, cal due July 2014)
Stopwatch (Intertek ID# P60624, cal due July 23, 2014)
Mitutoyo 2 in. Digital Deflection Gauge (Intertek ID# P60024, cal due May 1, 2014)
Mitutoyo Digital Caliper (Intertek ID# P52626, cal due May 1, 2014)

Time/Temp/RH: 12:05PM / 24.2℃ / 48.0%

Direction	Test	Design Load (Inward/ Outward) (lbf)	Factored Load	Calculated Moment (lbf-ft)	Equivalent Quarter-Point Load (lbf)	Required Proof Load (lbf)	Deflections (in.)	Pass/Fail
Outward	Individual Elements (over 12 in. x 12 in.)	112	281	-	-	281	1.355	**Pass**
	Vertical Uniform Load (per ft)	103	257	2066	1030	2060	3.405	**Pass**
	Horizontal Uniform Load (per ft)	34	86	689	343	687	3.232	**Pass**
	Midspan Horizontal Concentrated Load	225	375	-	-	375	2.638	**Pass**
	Top Rail Adjacent to Connection Concentrated Load	225	421	-	-	421	2.677	**Pass**
	Top Rail Adjacent to Wood Connection Concentrated Load	225	562	-	-	562	0.237	**Pass**

Direction	Test	Design Load (Inward/ Outward) (kN)	Factored Load	Calculated Moment (kNm)	Equivalent Quarter-Point Load (kN)	Required Proof Load (kN)	Deflections (mm)	Pass/Fail
Outward	Individual Elements (over 300 mm in. x 300 mm)	0.5	1.25	-	-	1.25	34.4	**Pass**
	Vertical Uniform Load (per m)	1.5	3.75	2.80	4.58	9.17	86.5	**Pass**
	Horizontal Uniform Load (per m)	0.5	1.25	0.93	1.53	3.06	82.1	**Pass**
	Midspan Horizontal Concentrated Load	1	1.67	-	-	1.67	67.0	**Pass**
	Top Rail Adjacent to Connection Concentrated Load	1	1.88	-	-	1.88	68.0	**Pass**
	Top Rail Adjacent to Wood Connection Concentrated Load	1	2.50	-	-	2.50	6.0	**Pass**

Test:	**Dimensional Checks**			Project:	G101536549
Date:	5-Mar-14			Eng/Tech:	Chris Chang
Client:	Fortress Railing Products			Reviewer:	Riccardo DeSantis
Product:	**AL¹³ Railing System with P2 Bracket**				
Post Spacing:	8.0	ft	2.44	m	
Height of Guard:	43.5	in	1105	mm	
Opening in Guard:	3.75	in	95	mm	
Method:	2010 National Building Code of Canada				
	2012 Ontario Building Code				
	2006 Alberta Building Code				
	9.8.8.3 Height of Guards				
	9.8.8.5 Openings in Guards				
	9.8.8.6 Design of Guards to Not Facilitate Climbing / Guards Designed Not to Facilitate Climbing / *Design to Prevent Climbing*				
Time/Temp./RH:	12:05PM / 24.2℃ / 48.0%				
Equipment:	Vaisala Temp/RH Indicator (Intertek ID# 9-0176, cal due July 2014)				
	Tape Measure (Intertek ID# P60494, cal due August 2014)				

Description		Measured Dimension (mm)	Requirement (mm)	Pass/Fail
9.8.8.3 Height of Guards		1105	≥ 1070	**Pass**
9.8.8.5 Openings in Guards	Between Pickets	95	< 100	**Pass**
	Under Bottom Rail	89	< 100	**Pass**

Description	Result	Requirement	Pass/Fail
9.8.8.6 Design of Guards to Not Facilitate Climbing / Guards Designed Not to Facilitate Climbing	No elements protruding from the vertical between 140 mm and 900 mm that facilitate climbing	No elements protruding from the vertical between 140 mm and 900 mm that facilitate climbing	**Pass**

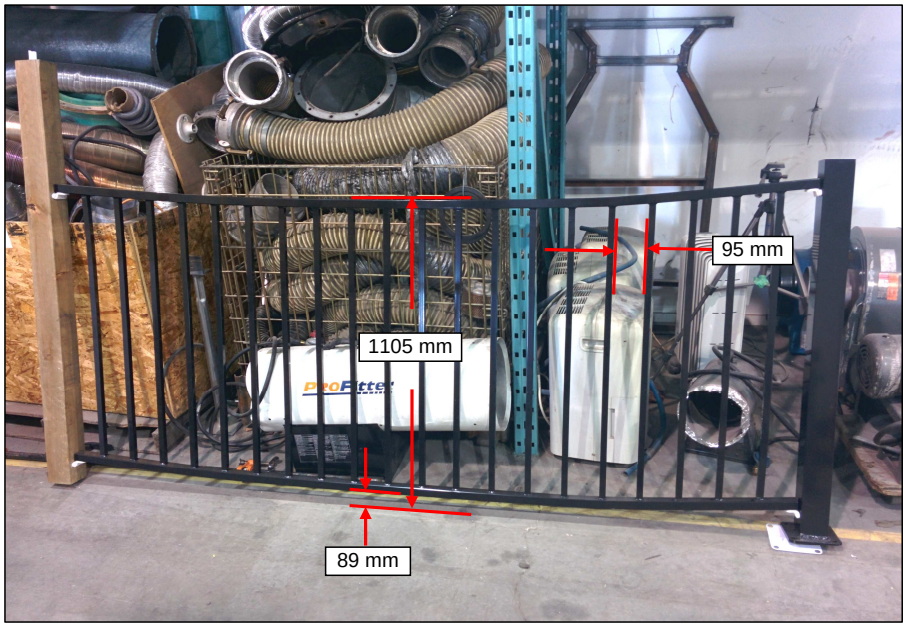

Intertek

Test:	**Loads on Guards**	Project:	G101536549
Date:	7-Mar-14	Eng/Tech:	Paul Randhawa
Client:	Fortress Railing Products	Reviewer:	Riccardo DeSantis
Product:	**AL¹³ Railing System with Evolve External Bracket**		

Post Spacing:	8	ft	2.44	m
Height of Guard:	42	in	1067	mm
Opening in Guard:	3.875	in	98	mm

Method: 2010 National Building Code of Canada, 9.8.8.2 Loads on Guards
2012 Ontario Building Code, 9.8.8.2 Loads on Guards
2006 Alberta Building Code, 9.8.8.2 Loads on Guards

Safety Factor:
1.67 (based on a resistance factor Ø = 0.9 for aluminum)
1.875 (based on a resistance factor Ø = 0.8 for shear connection)
2.50 (based on a resistance factor Ø = 0.6 for aluminum to wood connection)

Equipment:
Artech 5000 lbf Load Cell (Intertek ID# 9-0343, cal due October 2014)
Vaisala Temp/RH Indicator (Intertek ID# 9-0176, cal due July 2014)
Stopwatch (Intertek ID# P60624, cal due July 23, 2014)
Mitutoyo 2 in. Digital Deflection Gauge (Intertek ID# P60024, cal due May 1, 2014)
Mitutoyo Digital Caliper (Intertek ID# P52626, cal due May 1, 2014)

Time/Temp/RH: 9:05AM / 22.3℃ / 47.0%

Direction	Test	Design Load (Inward/ Outward) (lbf)	Factored Load	Calculated Moment (lbf-ft)	Equivalent Quarter-Point Load (lbf)	Required Proof Load (lbf)	Deflections (in.)	Pass/Fail
Outward	Individual Elements (over 12 in. x 12 in.)	112	281	-	-	281	1.318	**Pass**
	Vertical Uniform Load (per ft)	103	257	2066	1030	2060	3.388	**Pass**
	Horizontal Uniform Load (per ft)	34	86	689	343	687	3.366	**Pass**
	Midspan Horizontal Concentrated Load	225	375	-	-	375	2.488	**Pass**
	Top Rail Adjacent to Connection Concentrated Load	225	421	-	-	421	1.773	**Pass**
	Top Rail Adjacent to Wood Connection Concentrated Load	225	562	-	-	562	0.240	**Pass**

Direction	Test	Design Load (Inward/ Outward) (kN)	Factored Load	Calculated Moment (kNm)	Equivalent Quarter-Point Load (kN)	Required Proof Load (kN)	Deflections (mm)	Pass/Fail
Outward	Individual Elements (over 300 mm in. x 300 mm)	0.5	1.25	-	-	1.25	33.5	**Pass**
	Vertical Uniform Load (per m)	1.5	3.75	2.80	4.58	9.17	86.1	**Pass**
	Horizontal Uniform Load (per m)	0.5	1.25	0.93	1.53	3.06	85.5	**Pass**
	Midspan Horizontal Concentrated Load	1	1.67	-	-	1.67	63.2	**Pass**
	Top Rail Adjacent to Connection Concentrated Load	1	1.88	-	-	1.88	45.0	**Pass**
	Top Rail Adjacent to Wood Connection Concentrated Load	1	2.50	-	-	2.50	6.1	**Pass**

Test:	**Dimensional Checks**		Project:	G101536549
Date:	7-Mar-14		Eng/Tech:	Chris Chang
Client:	Fortress Railing Products		Reviewer:	Riccardo DeSantis
Product:	**AL¹³ Railing System with Evolve External Bracket**			
Post Spacing:	8.0	ft	2.44	m
Height of Guard:	43.5	in	1105	mm
Opening in Guard:	3.75	in	95	mm
Method:	2010 National Building Code of Canada			
	2012 Ontario Building Code			
	2006 Alberta Building Code			
	9.8.8.3 Height of Guards			
	9.8.8.5 Openings in Guards			
	9.8.8.6 Design of Guards to Not Facilitate Climbing / Guards Designed Not to Facilitate Climbing / *Design to Prevent Climbing*			
Time/Temp./RH:	9:05AM / 22.3℃ / 47.0%			
Equipment:	Vaisala Temp/RH Indicator (Intertek ID# 9-0176, cal due July 2014)			
	Tape Measure (Intertek ID# P60494, cal due August 2014)			

Description		Measured Dimension (mm)	Requirement (mm)	Pass/Fail
9.8.8.3 Height of Guards		1105	≥ 1070	**Pass**
9.8.8.5 Openings in Guards	Between Pickets	95	< 100	**Pass**
	Under Bottom Rail	89	< 100	**Pass**

Description	Result	Requirement	Pass/Fail
9.8.8.6 Design of Guards to Not Facilitate Climbing / Guards Designed Not to Facilitate Climbing	No elements protruding from the vertical between 140 mm and 900 mm that facilitate climbing	No elements protruding from the vertical between 140 mm and 900 mm that facilitate climbing	**Pass**

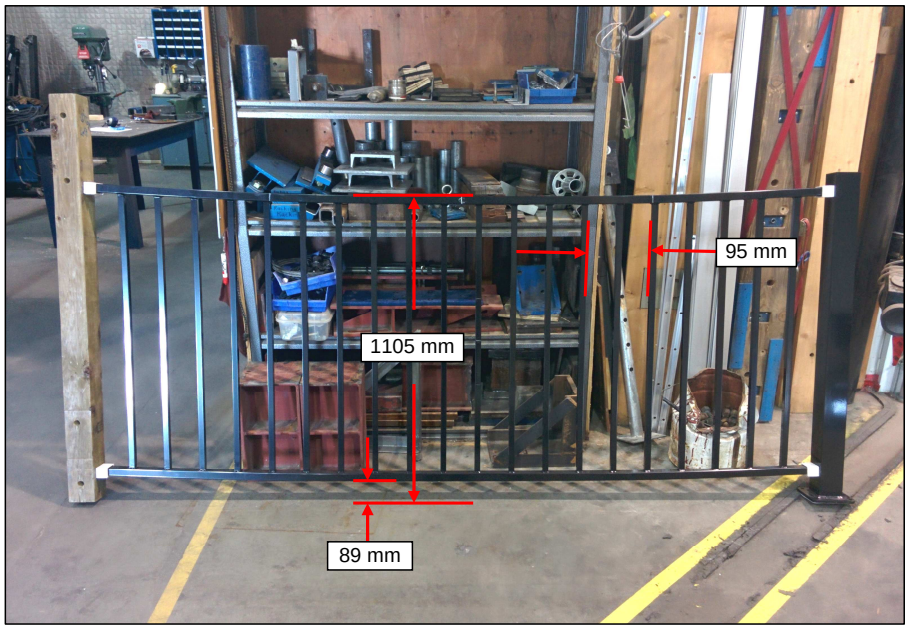

APPENDIX B: Installation Instructions – P2 Brackets (5 pages)

Installation Instructions for Fortress Al[13] Railing Traditional Panels with P2 Brackets and Al[13] Posts

It is the responsibility of the installer to meet all code and safety requirements, and to obtain all required building permits. The deck and railing installer should determine and implement appropriate installation techniques for each installation situation. The Fortress Company or its distributors shall not be held liable for improper or unsafe installations.

Fortress Al[13] Posts must always be secured to the deck framing. Fortress Al[13] Posts should never be attached to only the deck boards.

Note

When cutting Fortress railing, it is very important to complete the following at cut points. Not following the below steps will result in corrosion at the cut areas:

- Remove all metal shavings from the cut area
- File any sharp edges left by cutting. Thoroughly wipe and remove any filings, grime or dirt from the railing. Paint all cut edges with two coats of Fortress touch-up paint.
- Be sure to remove any metal shavings from the surface of deck, patio or balcony to prevent stains on the deck surface.

Required Materials

Miter saw with fine tooth blade, Drill, 3/16” Drill Bit, T-25 Driver Bit, Drill Bit Extender, Tape Measure, Wrenches, Speed Square, Center Punch, Fortress Touch-up paint, 3-1/2” Support Blocks and Hammer.

Mount Al[13] Posts

- Wood Blocking tied to deck frame must be installed and constructed with treated dimensional lumber with a minimum thickness of 1-1/2”.
- **Al[13] 3” Post Spacing must not exceed 96” for 8’ Panels and 72” for 6’ Panels.**
- Position the edge of post base plate a minimum of ½” from the inside edge of rim joist.
- Place Base Plate Barrier between post base and deck surface.
- Mount posts at appropriate points based on panel length.
- Attach Al[13] posts with 3/8” X 3-1/2” Hex Head galvanized bolts.

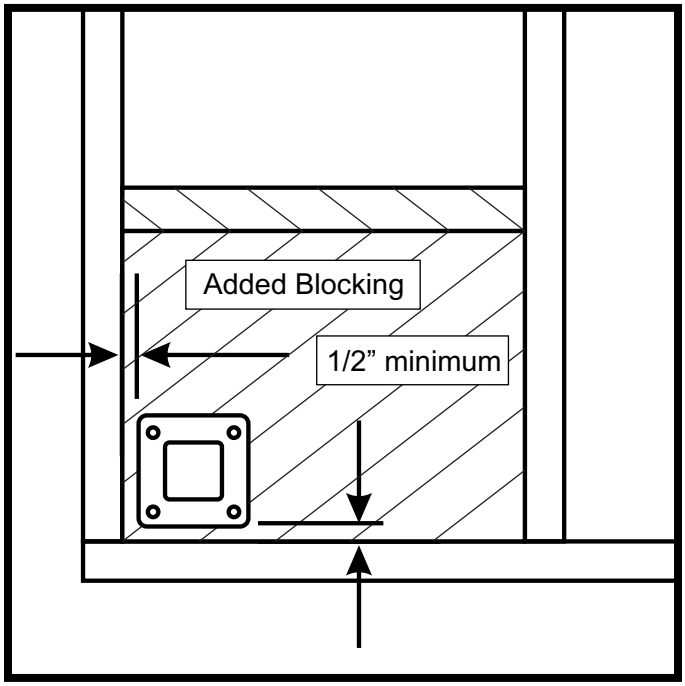

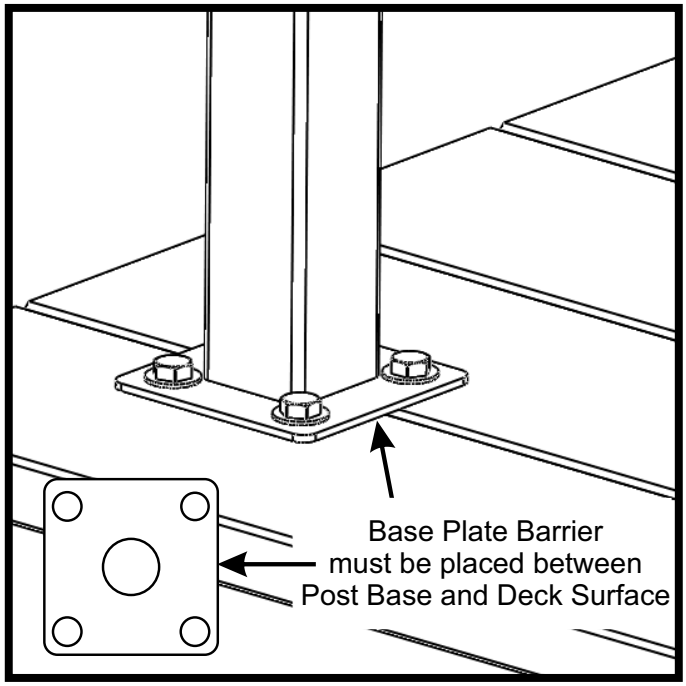

For technical assistance, please email: technicalhelp@fortressrailing.com
Hours of Operation Monday through Friday 8:00 AM to 5:00 PM, CST
Phone: 1-866-323-4766 (IRON) Fax: 972-644-3720
www.fortressrailing.com

REV 030215

Al[13] Traditional Panel Installation Options

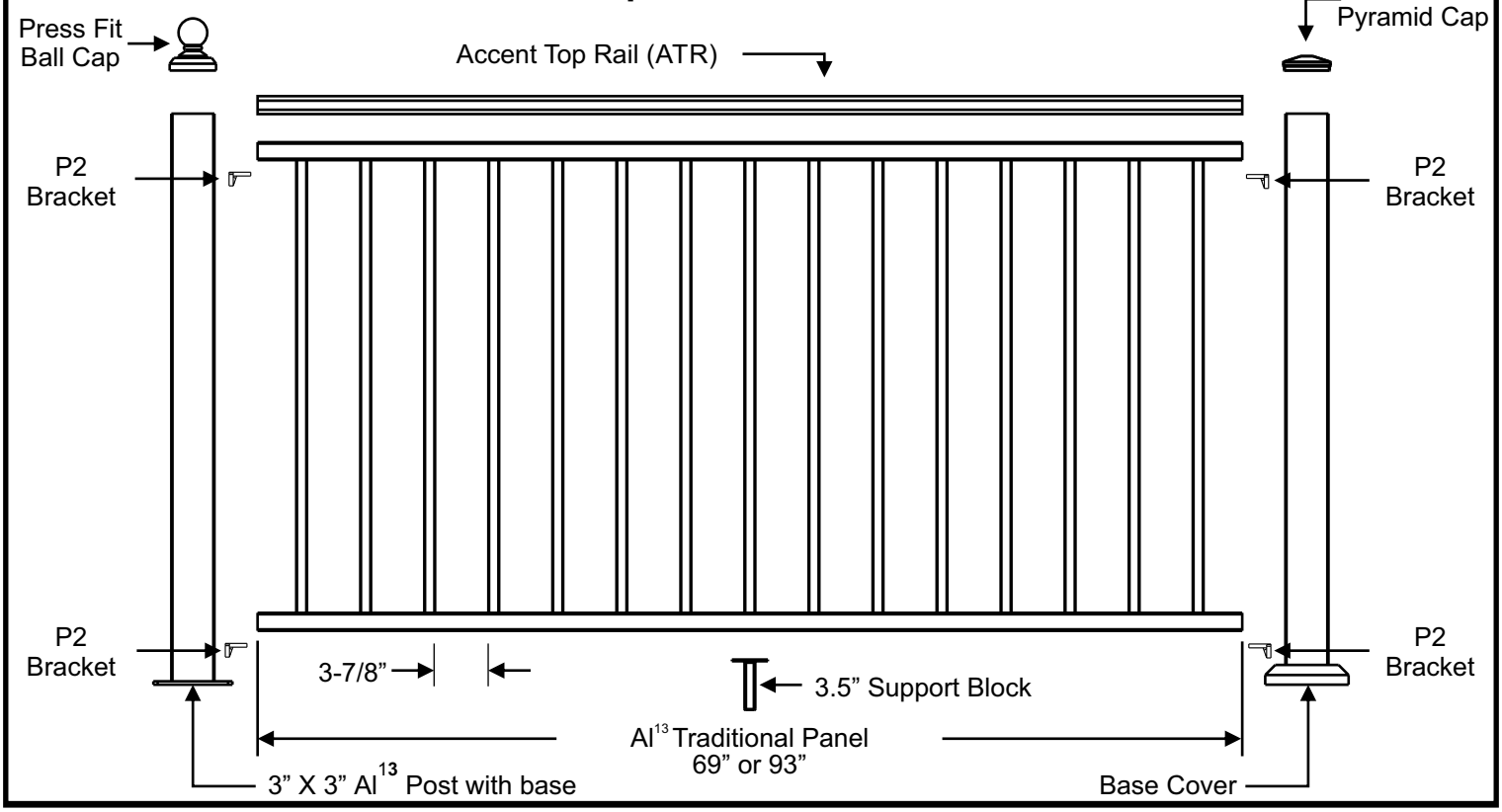

Al[13] Traditional Panel with Accent Top Panel Installation Options

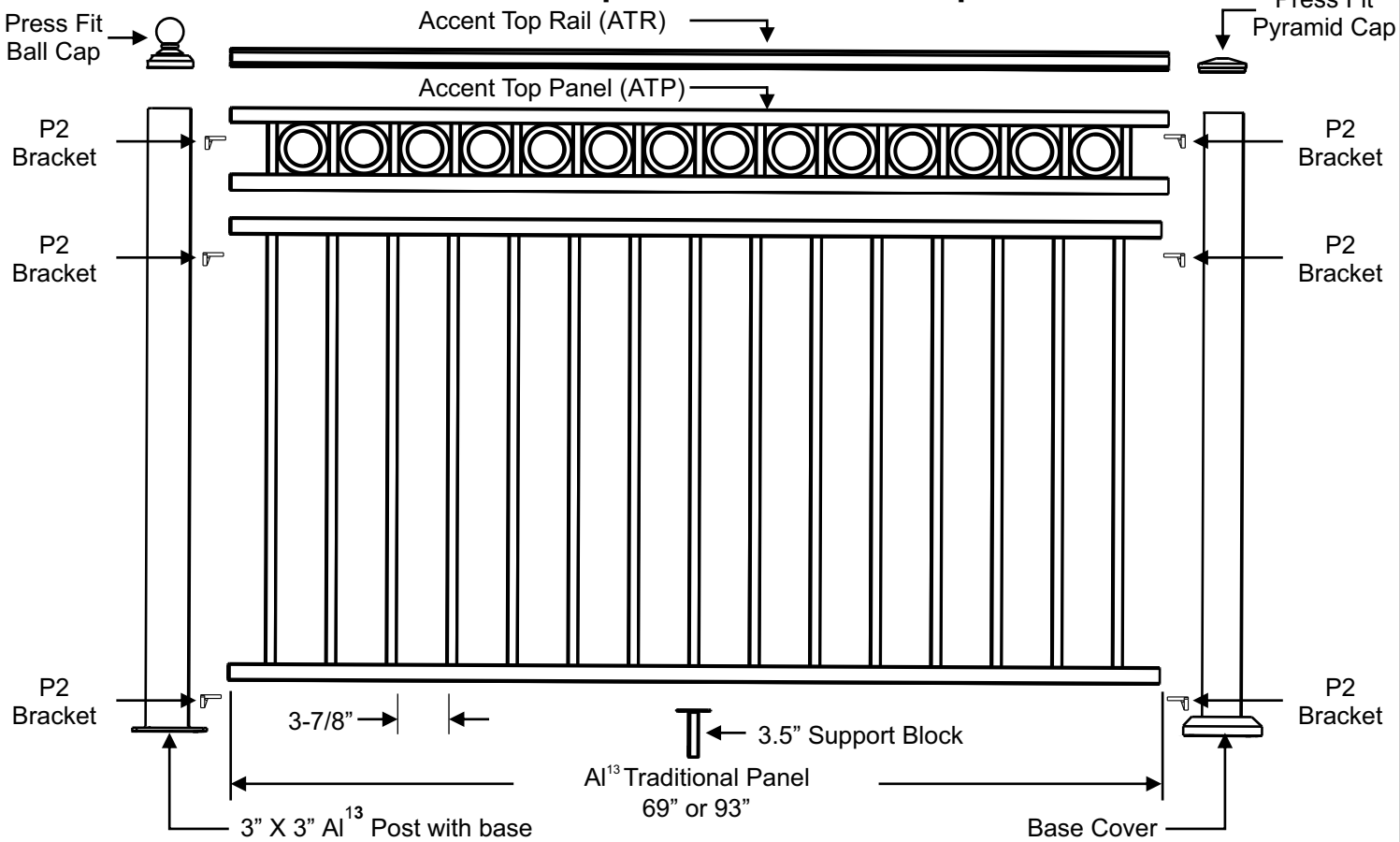

Al[13] Traditional Panel and Al[13] Post Configurations

Railing Panel Height	Railing Panel without Accent Top Panel: Installed Panel Height*	Railing Panel without Accent Top Panel: Required Post	Railing Panel with Accent Top Panel: Installed Panel Height with ATP*	Railing Panel with Accent Top Panel: Required Post
34”	37-1/2”	39-1/2”	42-1/2”	45-1/2”
40”	43-1/2”	45-1/2”	X	X

***Heights includes a 3-1/2” space between deck surface and bottom edge of bottom rail.**

Al[13] Traditional Panel Installation with P2 Bracket

- Check posts to ensure that all posts are square and straight. Shim posts as required.
- Support Panel on 3-1/2” Support Blocks.
- Center Panel between the post so that there is a equal distance between the last baluster and post at each end.
- **Minimum distance between the last picket and post is 1-5/8”**
- Clamp Rail to Post at each end to prevent movement. **Place a piece of cardboard between clamp and Al[13] Post & Panel**
- Mark the rails so that the end cuts will be flush with the post.
- **Mark the top and bottom of Panel. This will be needed in a later step.**

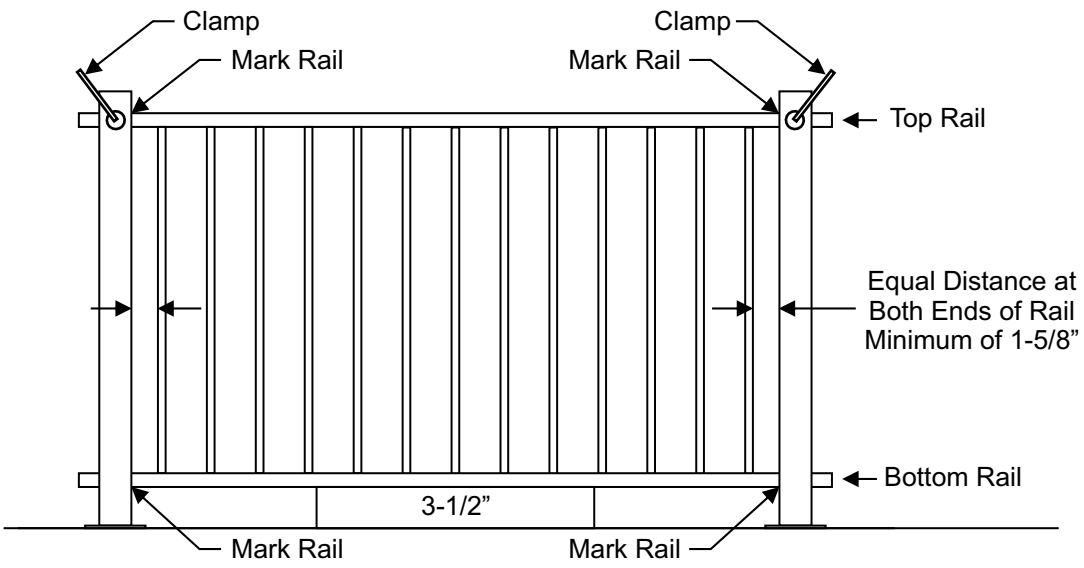

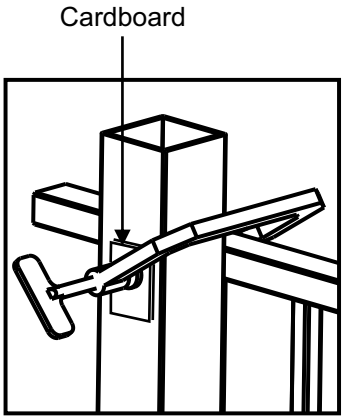

Cutting Al[13] Traditional Panels

- The best way to cut Panels is to use a miter saw.
- A fine tooth carbide tipped blade designed to cut non-ferrous materials is recommended.
- Setup a work surface that is level and large enough to support all four corners of the Panel.
- Supports should be the same height as saw base to keep panel straight and level when cutting Panel.
- With Panels completely supported, make cuts at the marked locations from previous step.
- Al[13] Panels can be miter cut at an angle up to 45°
- Remove any burrs or shavings from cut edges. Apply two coats of Fortress touch-up paint to all cut edges.
- Check the fit of panel between post. **Be careful not to scratch post with end cuts.**

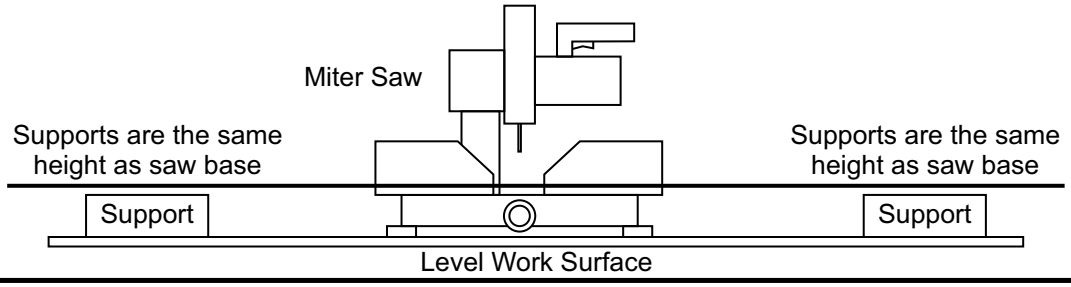

Al[13] P2 Bracket Installation

- Turn panel upside-down.
- Position P2 Bracket with backside flush to the end of the rail as shown.
- Mark the center point of the two screw holes with a center punch.
- Pre-drill holes with a 3/16” drill bit.
- Secure Bracket with supplied T-25 Drive Thread Cutting Screws.
- Note: Tips for cutting rails for angled installations with P2 brackets can be found in the Accent Top Panel installation portion of the Evolve Angle Bracket Instructions.

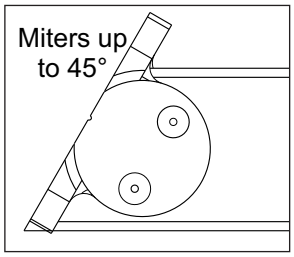

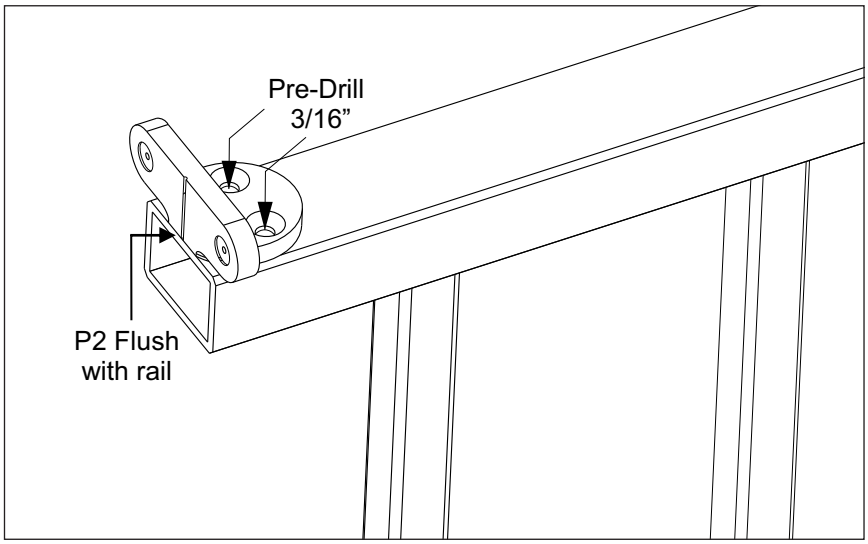

Al[13] Support Block Installation

- **Support are recommended for rail spans over 72”**
- Mark the center of Bottom Rail.
- Position Support Block and mark hole locations.
- Pre-drill with a 3/16” Drill Bit
- Secure Support Block with supplied screws.

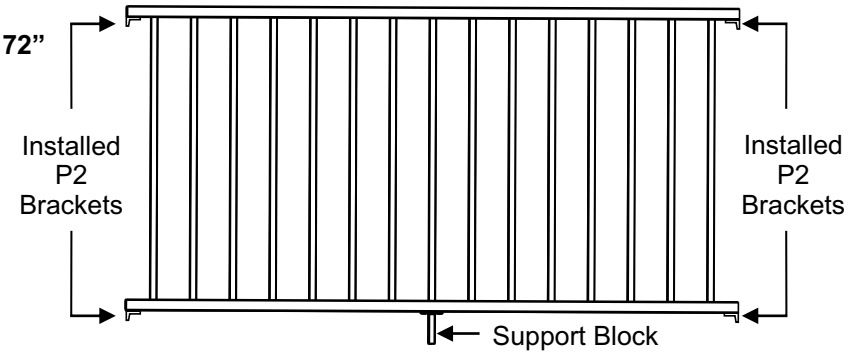

Installing Al[13] Traditional Rail Panels to Al[13] Posts

- If using Al[13] Base Covers install them now.
- Place a 3-1/2” Support near each post.
- Place Panel with Brackets and Support Blocks installed between Posts.
- Center Panel on each Post.
- With Panel in position pre-drill screw locations where Brackets meet Posts with a 3/16” drill bit.
- Secure Bracket to Post with supplied T-25 Drive Thread Cutting Screws.
- If installing a Al[13] Accent Top Rail (ATR), Cut ATR to length and snap onto top rail. Use epoxy to secure ATR to top rail.
- Install Post Caps

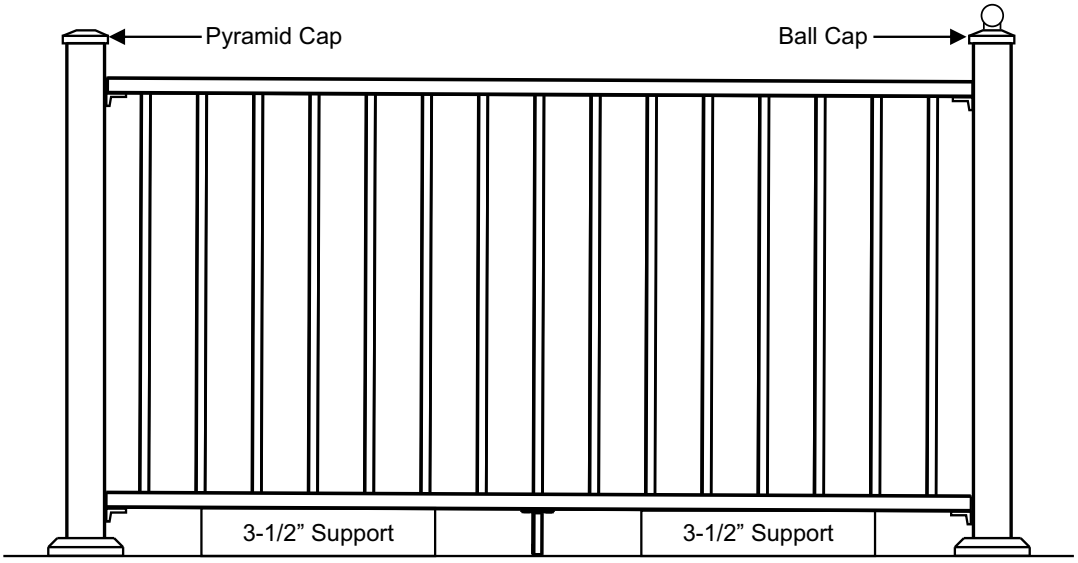

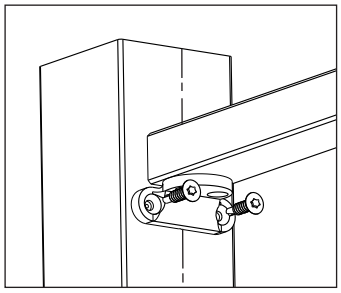

Installing Al[13] Traditional Panels with Al[13] Accent Top Panel (ATP) to Al[13] Posts

- If using Al[13] Base Covers install them now.
- Place a 3-1/2” support near each post.
- Place Panel with Brackets and Support installed between posts and on Support Blocks.
- Center Panel on each Post.
- With Panel in position pre-drill screw locations where Brackets meet Posts with a 3/16” drill bit.
- Secure Brackets to Posts with supplied T-25 Drive Thread Cutting Screws.
- Install P2 Bracket to Al[13] ATP
- Slide ATP with P2 Bracket installed over the top rail.
- Secure Brackets to Posts with supplied T-25 Drive Thread Cutting Screws.
- Install Post Caps

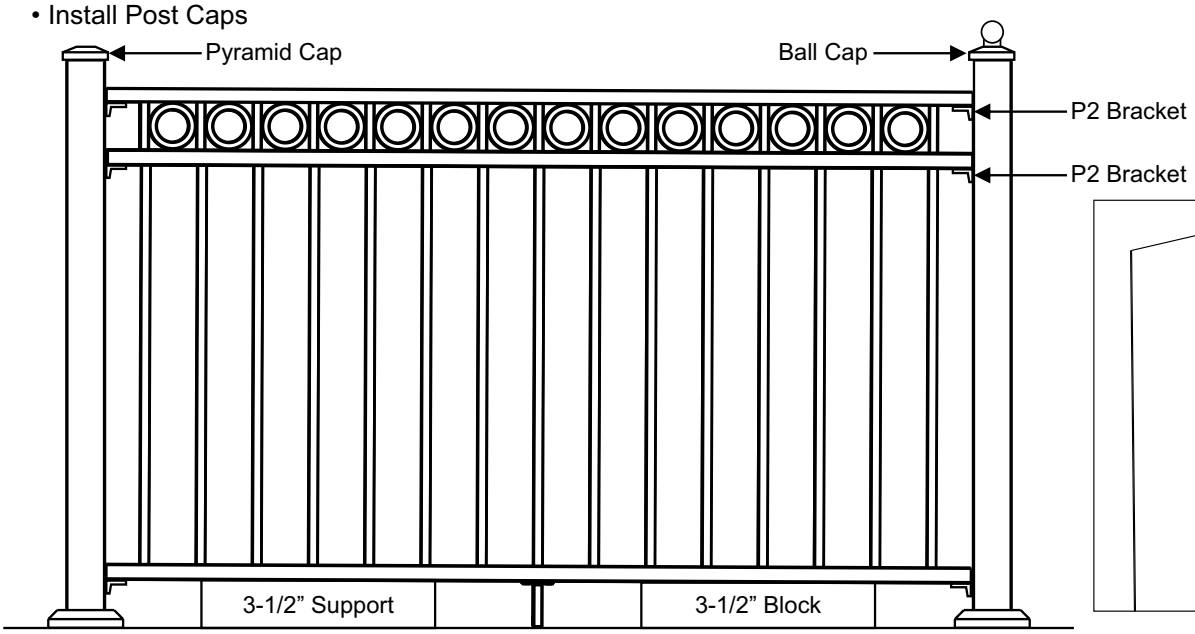

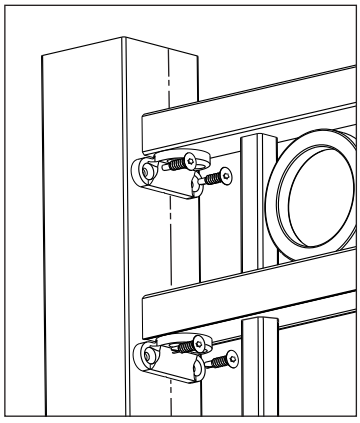

APPENDIX C: Installation Instructions – Evolve External Brackets (5 pages)

Installation Instructions for Fortress Al[13] Traditional Railing Panels with Evolve External Brackets and Al[13] Posts

It is the responsibility of the installer to meet all code and safety requirements, and to obtain all required building permits. The deck and railing installer should determine and implement appropriate installation techniques for each installation situation. Fortress Railing Products and its distributors shall not be held liable for improper or unsafe installations.

Fortress Al[13] Posts must always be secured to the deck framing. Fortress Al[13] Posts should never be attached to only the deck boards.

Read Instructions Completely Before Starting Installation

Note

When cutting Fortress railing, it is very important to complete the following at cut points.
- Remove all metal shavings from the cut area
- File any sharp edges left by cutting. Thoroughly wipe and remove any filings, grime or dirt from the railing.
- Be sure to remove any metal shavings from the surface of deck, patio or balcony to prevent stains on the deck surface.

Torx Safety Tips

- Always pre-drill holes with a 3/16” drill bit.
- Always use the lowest speed setting on drill.
- To reduce chance of bit breakage, start tightening with drill on low torque setting and work up until screw is secured.

Required Materials

Miter saw with fine tooth blade, Drill, 1/16” and 3/16” Drill Bits, T-25 Driver Bit, Phillip’s Head Screwdriver, Drill Bit Extender, Tape Measure, Wrenches, Speed Square, Center Punch, 3-1/2” Support Blocks and Hammer.

Mount Al[13] Posts*

- Wood Blocking tied to deck frame must be installed and constructed with treated dimensional lumber with a minimum thickness of 1-1/2”.
- **Al[13] 3” Post Spacing must not exceed 96” for 8’ Panels and 72” for 6’ Panels.**
- Position the edge of post base plate a minimum of ½” from the inside edge of rim joist.
- Place included Base Plate Barrier between post base and deck surface.
- Mount posts at appropriate points based on panel length.
- Attach Al[13] posts with 3/8 X 3-1/2” Hex Head galvanized bolts.

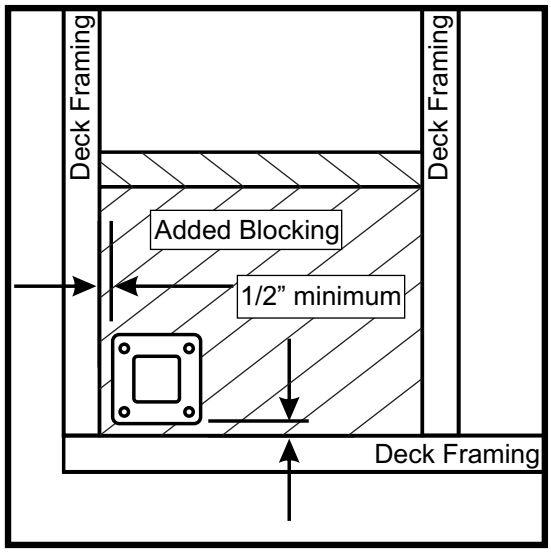

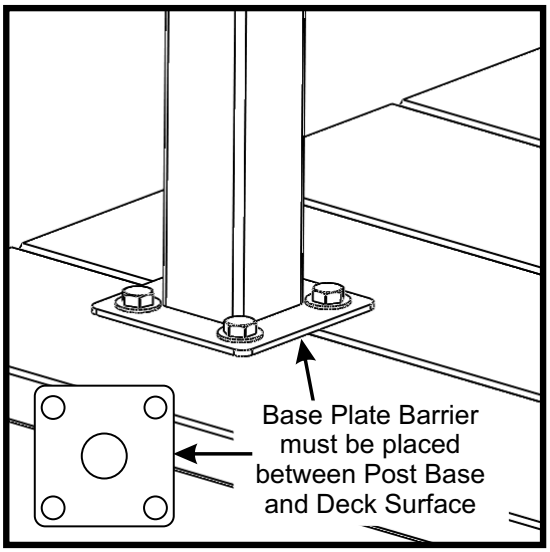

*Reference Fortress Al[13] Post mounting instructions

For technical assistance, please email: technicalhelp@fortressrailing.com
Hours of Operation Monday through Friday 8:00 AM to 5:00 PM, CST
Phone: 1-866-323-4766 Fax: 972-644-3720
www.fortressrailing.com

Al[13] Traditional Panel Installation Options

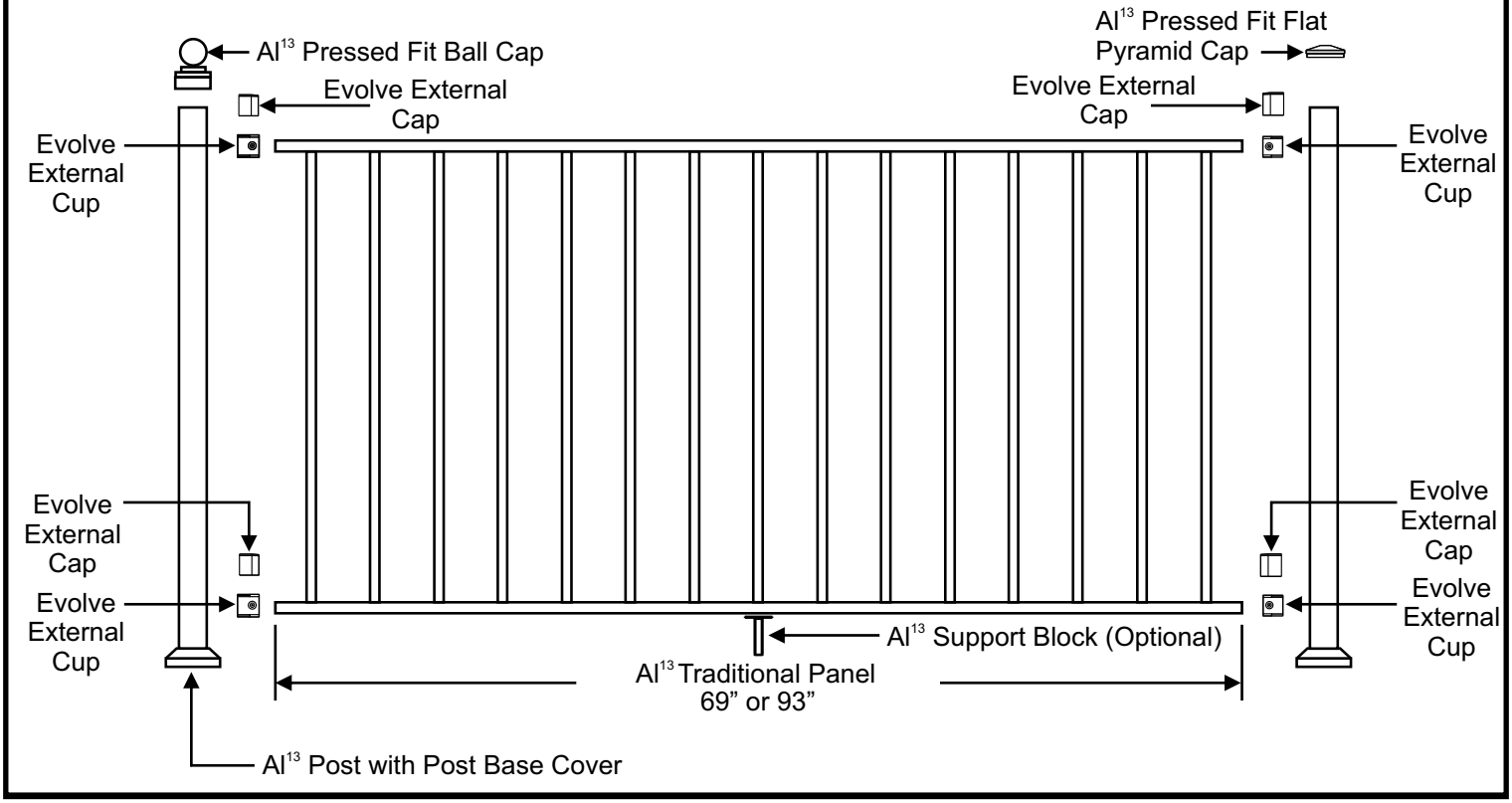

Al[13] Traditional Panel with Al[13] Accent Top Panel Installation Options

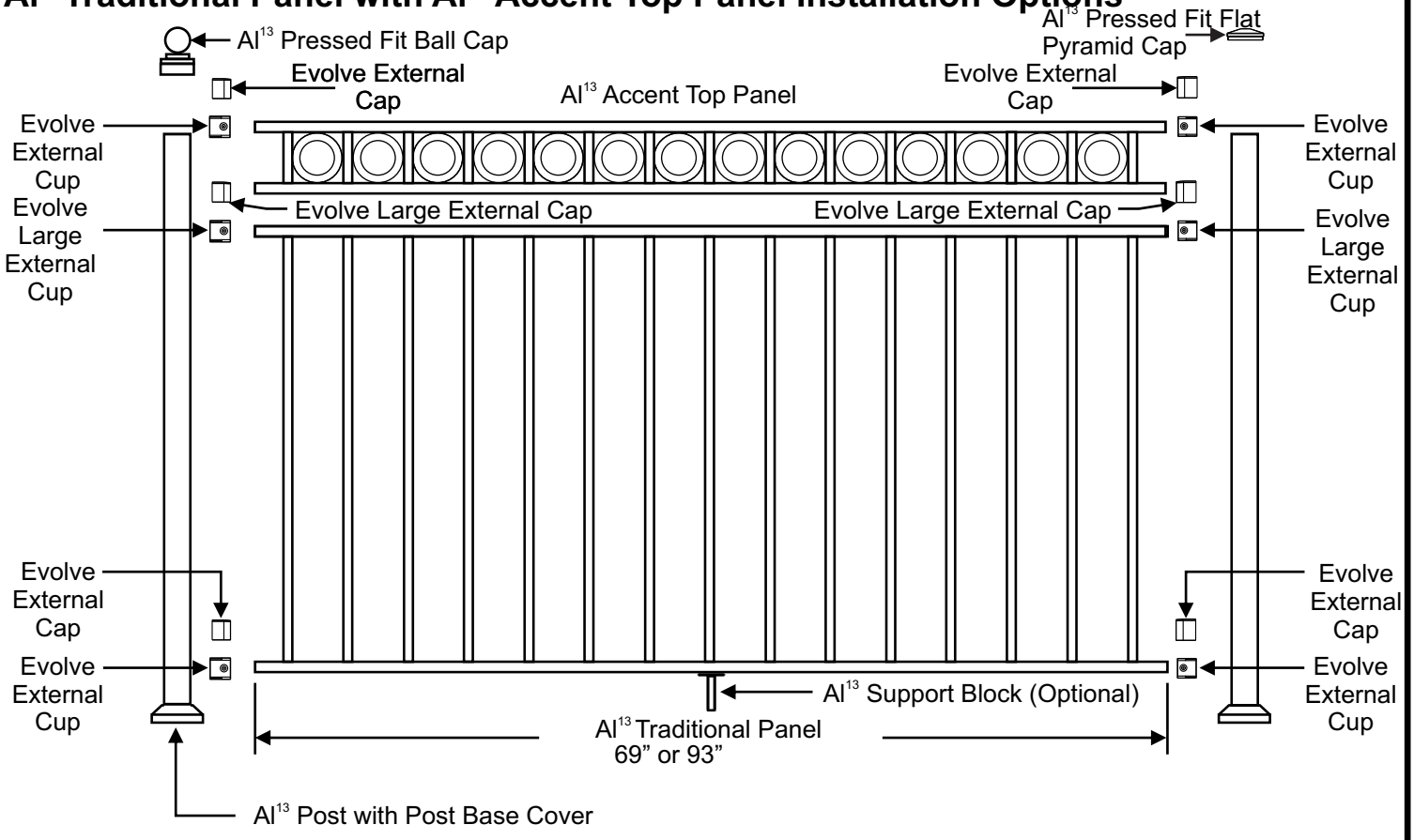

Al[13] Traditional Panel Installation (Without Al[13] Accent Top Panel) with Evolve External Bracket

- If installing Al[13] Traditional Panel with an Al[13] Accent Top Panel (ATP), disregard this box and proceed to next installation step.
- Check Al[13] Posts to ensure that all Al[13] Posts are square and straight. Shim Al[13] Posts as required.
- Support Al[13] Traditional Panel on 3-1/2" support blocks.
- Center Al[13] Traditional Panel between the Al[13] Posts so that there is an equal distance between the last baluster and Al[13] Posts at each end.
- **Minimum distance between the last baluster and post is 1-5/8"**
- Clamp Rail to Post at each end to prevent movement. **Place a piece of cardboard between clamp and Al[13] Post & Panel**
- Mark the rails 1/4" from the edge of the posts.
- The final rail length when cut must be 1/2" shorter to allow for Evolve Bracket clearance.

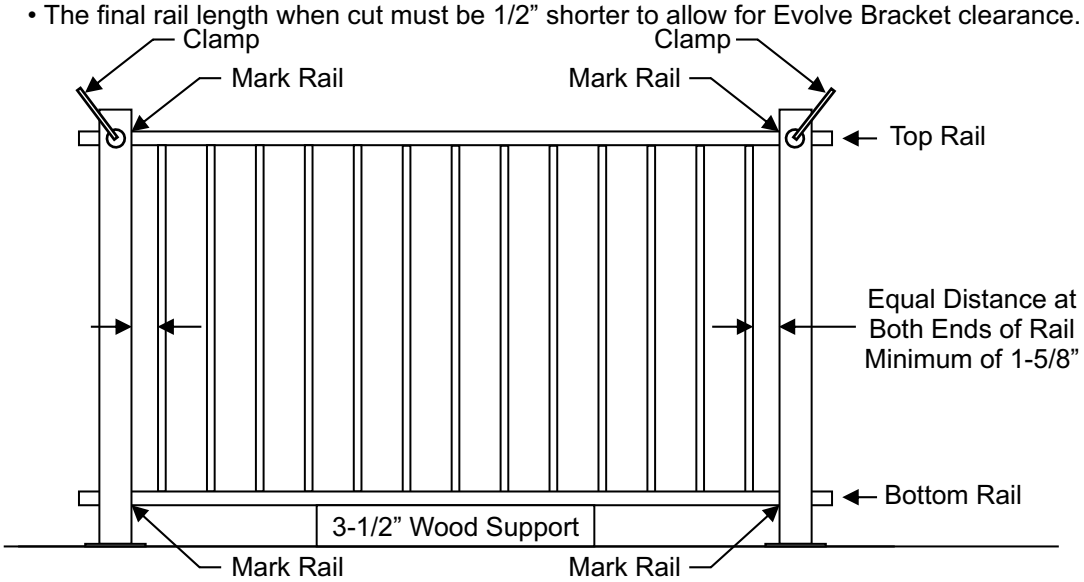

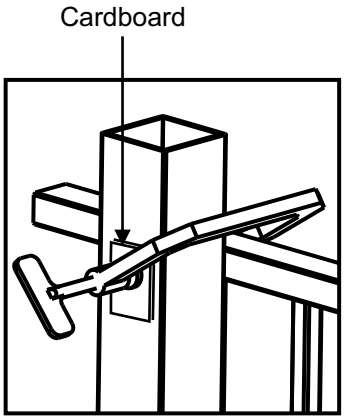

Al[13] Traditional Panel Installation with Evolve External & Evolve External Large Brackets (With Al[13] Accent Top Panel)

- Check posts to ensure that all posts are square and straight. Shim posts as required.
- Support Al[13] Traditional Panel on 3-1/2" support blocks.
- Center Al[13] Traditional Panel between the post so that there is an equal distance between the last baluster and post at each end.
- **Minimum distance between the last baluster and post is 1-5/8"**
- **Maximum distance between the last baluster and post is 3-15/16"**
- Clamp Rail to Post at each end to prevent movement. **Place a piece of cardboard between clamp and Al[13] Post & Panel.**
- Mark the bottom rail of the Al[13] Traditional Panel and the top rail of the Al[13] Accent Top Panel, 1/4" from the edge of the posts.
- **The final rail length when cut must be 1/2" shorter to allow for Evolve External Bracket clearance.**

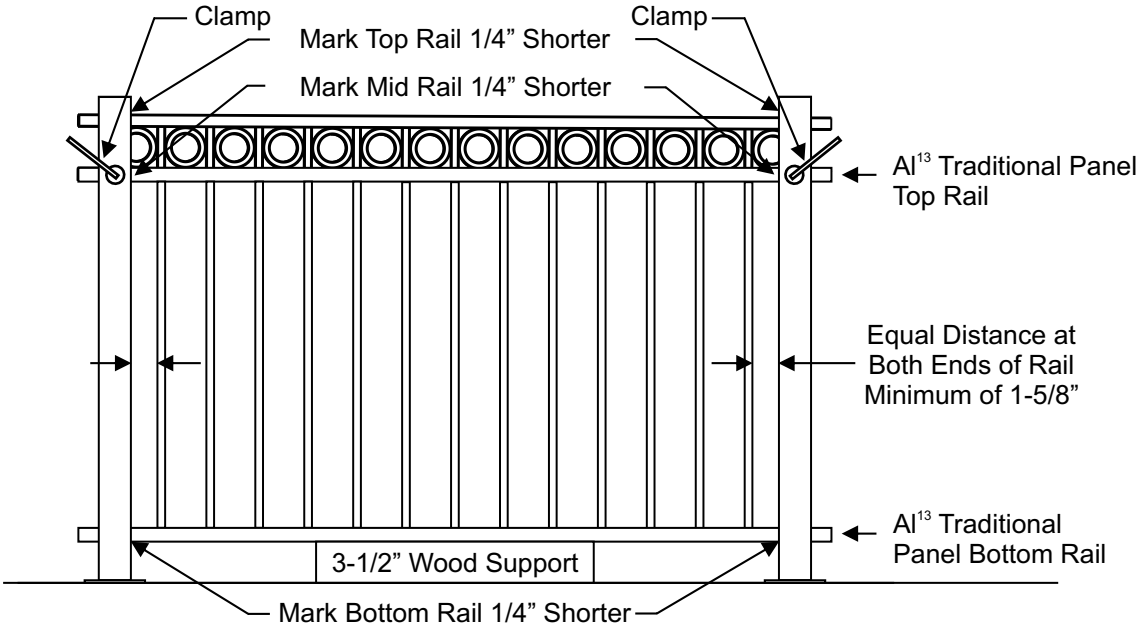

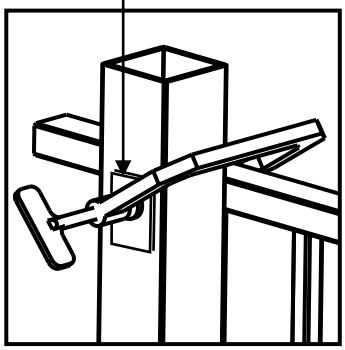

Cutting Al[13] Traditional Panels

- The best way to cut Al[13] Traditional Panels is to use a miter saw.
- A fine tooth carbide tipped blade designed to cut non-ferrous materials is recommended.
- Set up a work surface that is level and large enough to support all four corners of the Al[13] Traditional Panel.
- Supports should be the same height as saw base to keep Al[13] Traditional Panel straight and level when cutting.
- With Panels completely supported, make cuts at the marked locations from previous step.
- Remove any burrs or shavings from cut edges.
- Check the fit of Al[13] Traditional Panel between post. **Be careful not to scratch post with end cuts.**

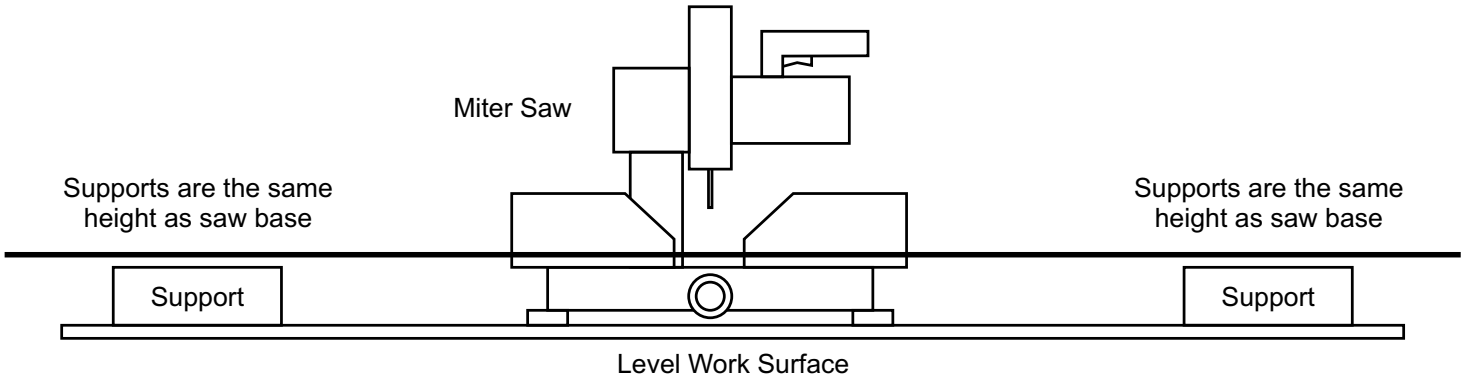

Al[13] Support Block Installation

- **Al[13] Support Block is recommended for rail spans over 72"'**
- Mark the center of Al[13] Traditional Panel Bottom Rail.
- Position Al[13] Support Block and mark hole locations.
- Pre-drill with a 3/16" Drill Bit
- Secure Al[13] Support Block with supplied screws.

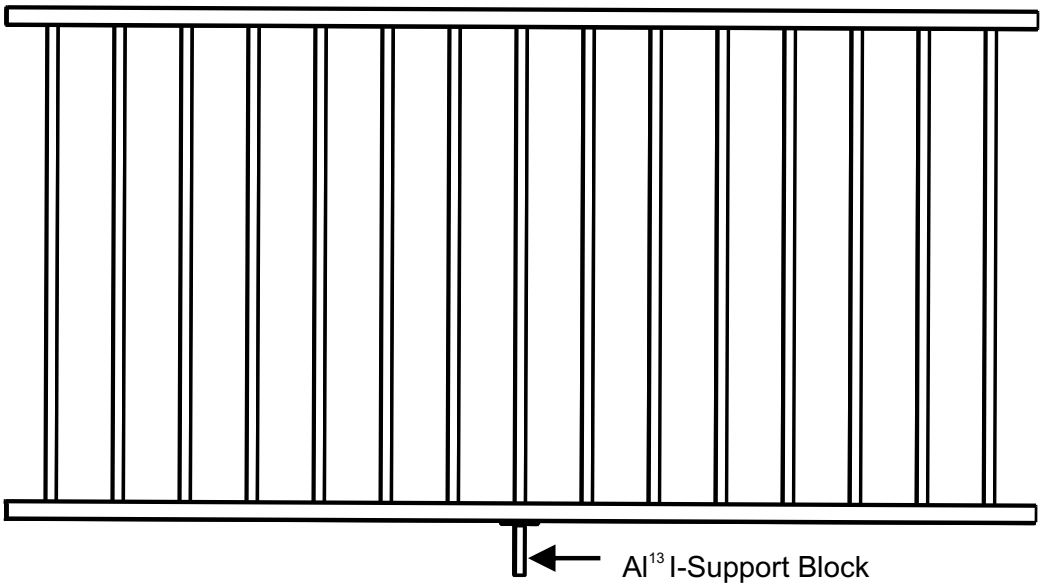

Al[13] Traditional Panel and Al[13] Post Configurations

Traditional Panel Height	Traditional Panel Only: Installed Panel Height*	Traditional Panel Only: Required Post	Traditional Panel with Al[13] Accent Top Panel: Installed Panel Height with ATP*	Traditional Panel with Al[13] Accent Top Panel: Required Post
34”	37-1/2”	39-1/2”	42-1/2”	45-1/2”
40”	43-1/2”	45-1/2”	X	X

***Installed heights include a 3-1/2” space between deck surface and bottom edge of bottom rail.**

Evolve External Bracket Hole Locations for Al[13] Traditional Panel Installations

Pre-Drilling with a 3/16” drill bit is required.

Rail Panel Height	Pre-Drill Dimensions: A*	B	C	D
34”	3-13/16”	1/2”	36-11/16”	13/16”
40”	3-13/16”	1/2”	42-11/16”	13/16”

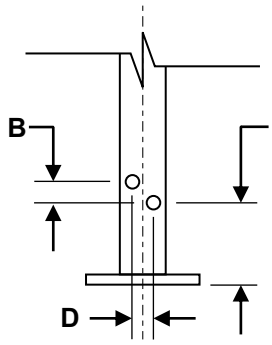

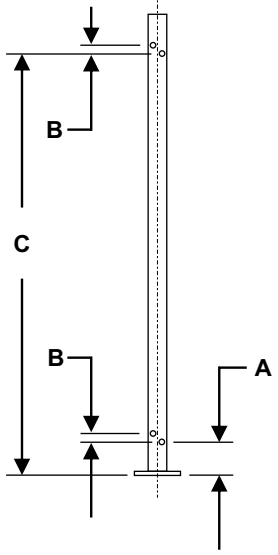

***Dimension A positions bottom edge of rail 3-1/2” above deck surface.**
***Dimension A is measured from the bottom surface of post base.**

Remove all metal shavings from deck, post base cover, post, and panel before bracket is screwed to post to prevent corrosion.

Al[13] Traditional Panel Installation with Evolve External Brackets (Without Al[13] Accent Top Panel)

When using Evolve External Brackets, rails MUST be cut 1/2” shorter than the distance between posts. 1/4” should be cut from the end of each rail to keep rail panel centered between posts.

- If rails were cut, file cut edges.
- Check fit of rail between installed Al[13] Posts.
- Install Al[13] Post Base Cover by sliding over the top of Al[13] Post.
- Secure External brackets to Al[13] Posts with provided T25 thread-cutting screws. Use two screws per bracket. Use low speed setting on drill.
- Drop Al[13] Traditional Panel into installed External brackets.
- Secure rails with provided T25 thread-cutting screws at each External bracket.
- Install External Caps by sliding the cap over the External Cup. Cap will snap into place.

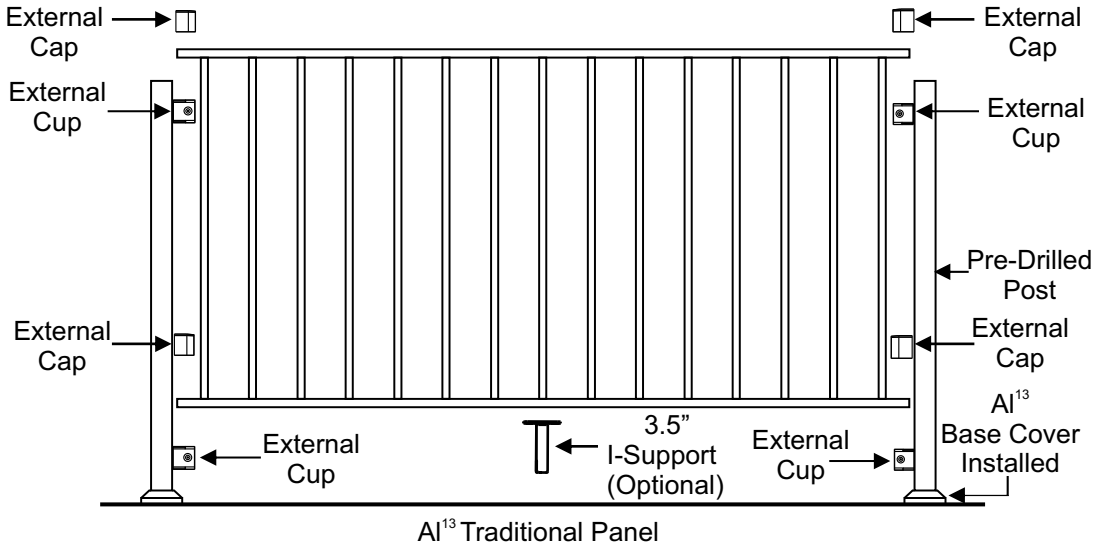

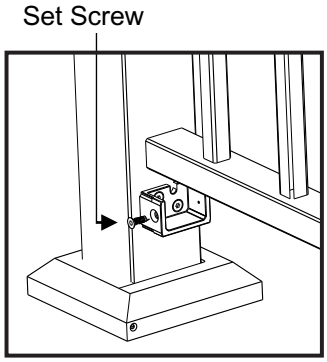

Evolve External Bracket Hole Locations for Al[13] Traditional Panel and Al[13] Accent Top Panel

Pre-Drilling with a 3/16” drill bit is required.

Traditional Panel Height	ATP Panel Height	Pre-Drill Dimensions A*	B	C	D	E	F	G
34”	5”	3-13/16”	1/2”	1/2”	36-11/16”	5-1/16”	13/16”	13/16”
40”	5”	X	X	X	X	X	X	X

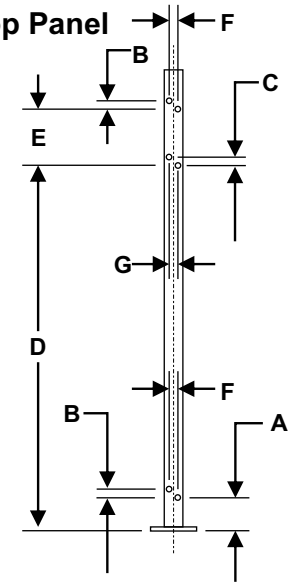

***Dimension A positions bottom edge of rail 3-1/2” above deck surface.**
***Dimension A is measured from the bottom surface of post base.**

Remove all metal shavings from deck, post base cover, post, and panel before bracket is screwed to post to prevent corrosion.

Al[13] Traditional Panel Installation with Evolve External and Evolve External Large Brackets (With Al[13] Accent Top Panel)

When using Evolve External Brackets, rails MUST be cut 1/2” shorter than the distance between posts. 1/4” should be cut from the end of each rail to keep rail panel centered between posts.

- If rails were cut, file cut edges.
- Check fit of rail between installed Al[13] Posts.
- Install Al[13] Post Base Cover by sliding over the top of Al[13] Post.
- Slide Al[13] Accent Top Panel panel over the top rail of the Al[13] Traditional Panel.
- Secure External brackets to Al[13] Posts with provided T25 thread-cutting screws. Use two screws per bracket. Use low speed setting on drill.
- Drop Al[13] Panel into installed External brackets.
- Secure rails with provided T25 thread-cutting screws at each External bracket.
- Install External Caps by sliding the cap over the External Cup. Cap will snap into place.

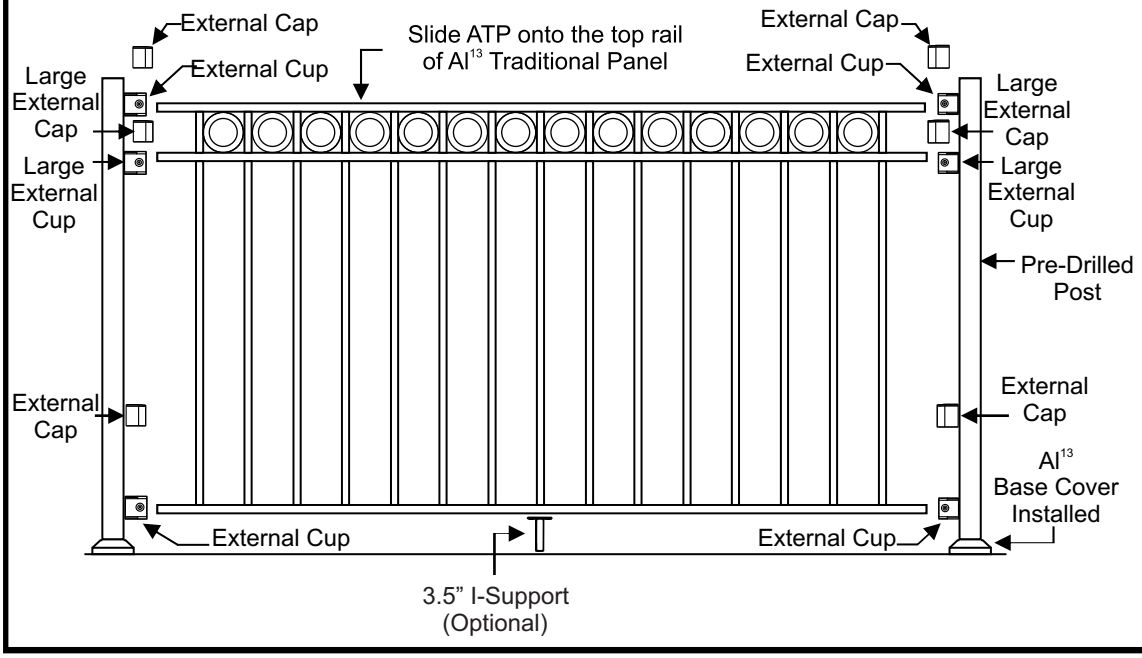

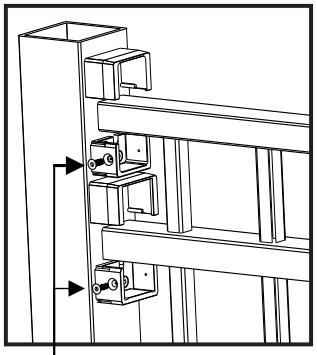

Set Screw